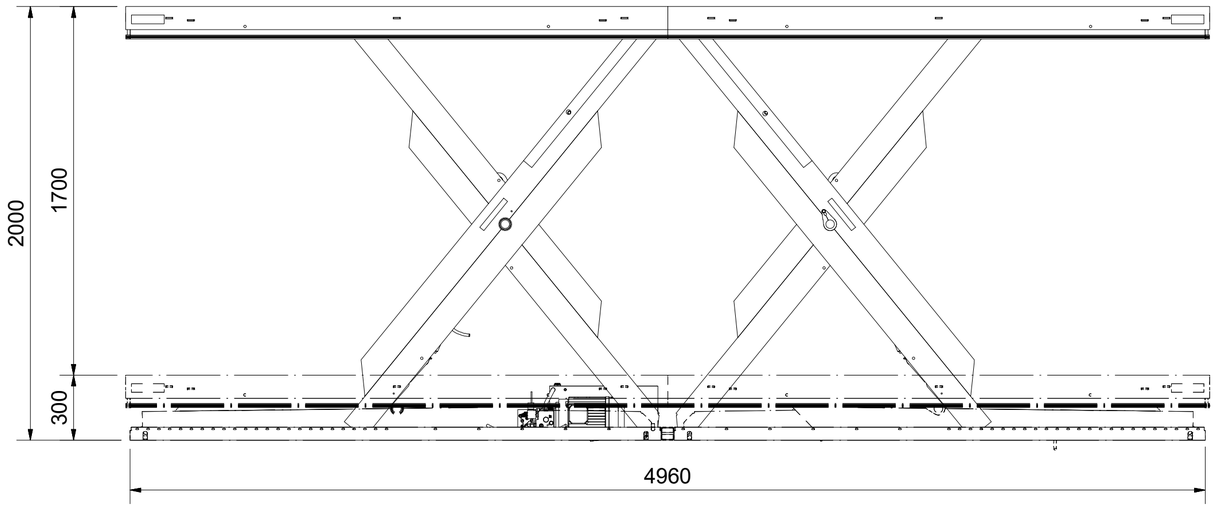

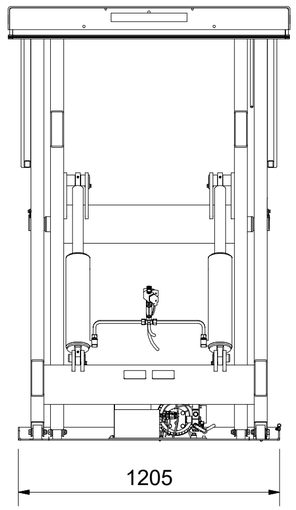

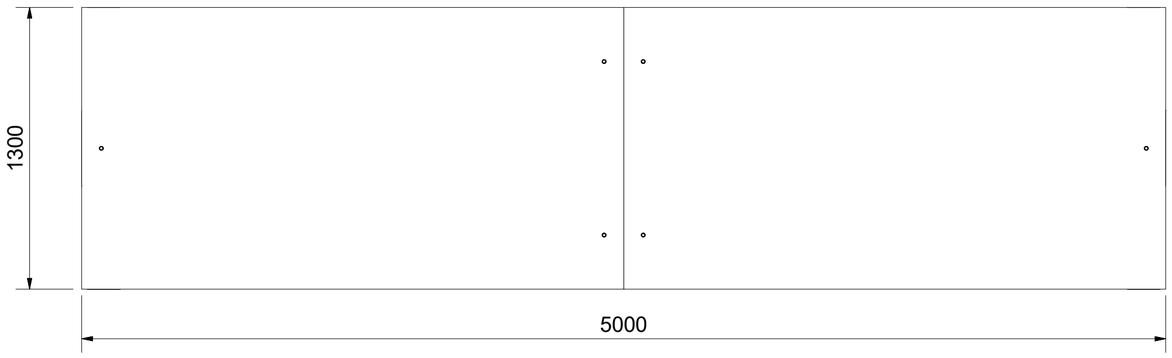

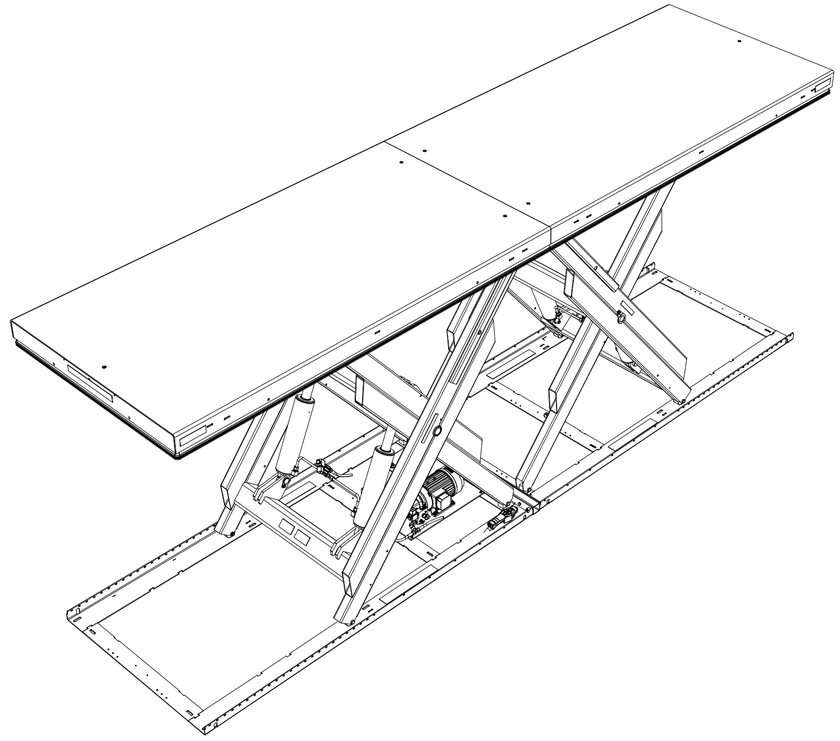

This document must not be copied without our written permission, and the contents thereof must not be imparted to a third party nor be used for any unauthorized purpose. Contravention will be prosecuted.

EdmoLift® www.edmolift.se

TTH 6000 (5000x1300)

www.edmolift.com

Drawing no

32885